LLC Resonant Converter for Front End DC/DC Conversion

Bo Yang and Fred C. Lee

Center for Power Electronics Systems
The Bradley Department of Electrical and Computer Engineering
Virginia Polytechnic Institute and State University
Blacksburg, VA 24061 USA

Alpha J. Zhang and Guisong Huang

Delta Power Electronics Center
238 Minxia Road, CIMIC Inductry Zone
Pudong, Shanghai 201209, China

***Abstract* - A new LLC resonant converter is proposed for Front End DC/DC conversion in Distributed Power System. Three advantages are achieved with this resonant converter. First, ZVS turn on and low turn off current of MOSFETs are achieved. The switching loss is reduced so we can operate the converter at higher switching frequency. Second advantage is that with this topology, we can optimize the converter at high input voltage. And last advantage is that with this topology, we can eliminate the secondary filter inductor, so the voltage stress on secondary rectifier will be limited to two times the output voltage, better rectifier diodes can be used and secondary conduction loss can be reduced. The converter utilizes leakage and magnetizing inductance of a transformer. With magnetic integration concept, all the magnetic components can be build in one magnetic core. The operation and characteristic of this converter is introduced and efficiency comparison between this converter and conventional PWM converter is given which shows a great improvement by using this topology.**

I. INTRODUCTION

The increasing efforts on pushing to high power density and high efficiency DC/DC converter have lead us to develop converters capable of operating at higher switching frequency with high efficiency. For this reason, resonant converters have drawn lot of attentions due to high efficiency, high switching frequency and high power density. The characteristics and operations of series resonant converter (SRC) and parallel resonant converter (PRC)[2] were been discussed a lot. Each of those converters has its pros and cons. For example, for SRC, light load output voltage regulation is always a problem for the control design. For PRC, circulating energy will hurt the high line or light load efficiency.

Distributed Power System (DPS) is a widely adopted configuration in computer and communication power systems because of its high efficiency, high reliability and flexibility. The well-accepted DPS structure is shown in Fig. 1. The front-end converter includes Power Factor Correction (PFC), which converts AC line input into a 400V intermediate bus, and Front-End DC/DC converters, which convert the 400V DC to an isolated 48V DC bus. For single-phase front-end converter, 1kW module is the most popular power level.

For this application, one requirement is hold up time, which requires the system run at full power for 20ms when AC input is lost. During hold up time, the energy will draw from 400V bus cap, this will cause voltage drop on 400V bus. For a normal design, the front-end DC/DC converter input voltage range will be 300V to 400V. The circuit normally works under high input voltage, which is 400V. During hold up time, the input voltage will drop to 300V. This special requirement imposes lot of difficulties on the design of front-end DC/DC converter, since for many PWM topologies the efficiency will drop at high input voltage. An optimized design should have higher efficiency at high input voltage.

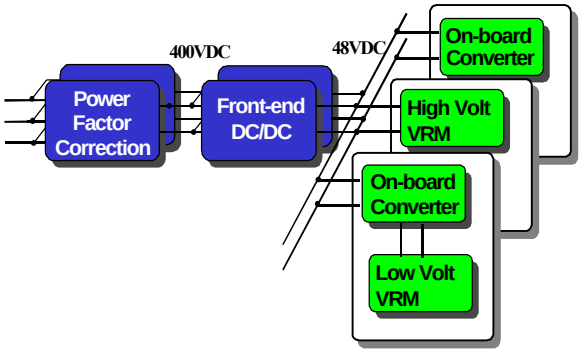

Fig. 1 Structure of Distributed Power System

This paper proposed a novel LLC resonant converter for this application. The advantages of this converter are:

- ZVS capability for zero to full load range, low MOSFET turn off current, so switching loss of this converter is very low;
- High efficiency at high input voltage, for this converter, the highest efficiency can be achieved at high input voltage, so we can optimize the converter for normal operation condition;
- Low voltage stress on secondary rectifier, because for this converter, there is no secondary filter inductor, so the voltage stress on rectifier diodes can be minimized to two times output voltage.

Another good thing about this converter is that the magnetic components of this converter can be easily integrated into one magnetic core. Also, leakage

This work was supported in primarily by the ERC Program of the National Science Foundation under Award Number EEC-9731677

inductance of the transformer can be utilized. In this paper, the operation and characteristic is discussed. Efficiency is compared between LLC resonant converter and other PWM converters with simulation. It can be seen that this converter offers very good performance.

II. A Novel LLC Resonant Converter

Fig. 2 shows circuit diagram of LLC resonant converter. Without the magnetizing inductance Lm, this converter is the same as series resonant converter. With participation of Lm, the operation and characteristic of this converter is very different from SRC then.

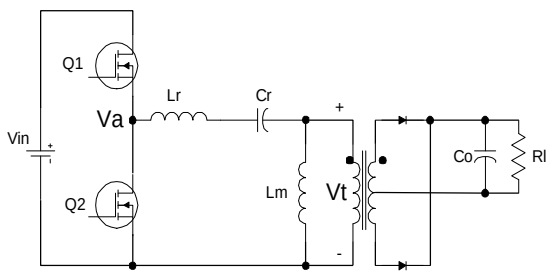

Fig. 2 LLC resonant converter

The circuit has three passive components, Lr, Cr and Lm. The secondary side is a center-tapped rectifier followed by a capacitive filter. The primary side of this diagram is a Half Bridge configuration; it could also be full bridge or other topologies. Since there is a capacitor in series with power path, automatic flux balancing can be achieved.

This converter works with variable frequency control. In this converter, two resonant frequencies exist. One is the resonant frequency of resonant inductor Lr and resonant capacitor Cr, another one is the resonant frequency of Lm plus Lr with Cr.

A. DC Characteristic of the converter

To understand the operation of the LLC resonant converter, it is necessary to get the DC characteristic of the converter.

Analysis of this kind of three elements resonant converter is quite complex. In traditional method, assumption like Fundamental Element Simplification (FES) [3] was made to simplify the analysis. It assumes that only the fundamental frequency component of the voltage and current are used to transfer energy. In this circuit, this is not an accurate assumption because we have two resonant frequency and they both play important role in this converter's operation. In this paper, we use simulation tools to analysis the converter. The method is to do frequency sweep at different load, at each point, we run the simulation to get a steady state operation and record the circuit condition. With reasonable number of simulations, we can get the characteristics curves of the converter.

Fig. 3 shows the DC characteristic of LLC resonant converter get from simulation. The frequency f1 and f2 in the picture are defined as following:

$$f1 = \frac{1}{2p\sqrt{LrCr}}$$

$$f2 = \frac{1}{2p\sqrt{(Lr+Lm)Cr}}$$

$$Qs = \frac{\sqrt{Lr/Cr}}{Rl}$$

From the DC characteristic of LLC converter, it can be seen that the peak of the gain is moving with load change. As load becomes light, this peak moves close to the resonant frequency of Lm+Lr and Cr. When load becomes heavier, the peak moves to the resonant frequency of Lr and Cr, and gain at resonant frequency f1 is always unity independent of load change. Another thing interesting is that for this converter, the gain characteristic can be either boost type or buck type, which means the gain can be higher than 1 or lower than 1, which is the characteristic of Buck Boost converter. From the shape of the characteristic, it can be seen that when load is light, the circuit characteristic is more like a PRC, when load increase, it eventually change to SRC.

The operation region can be divided into two area: ZCS area and ZVS area. When switching is higher than f1, the converter is always running at ZVS condition. When switching frequency is higher than f2, the converter always run at ZCS condition. When operating between f1 and f2, the load condition will determine if the converter is running at ZVS or ZCS condition.

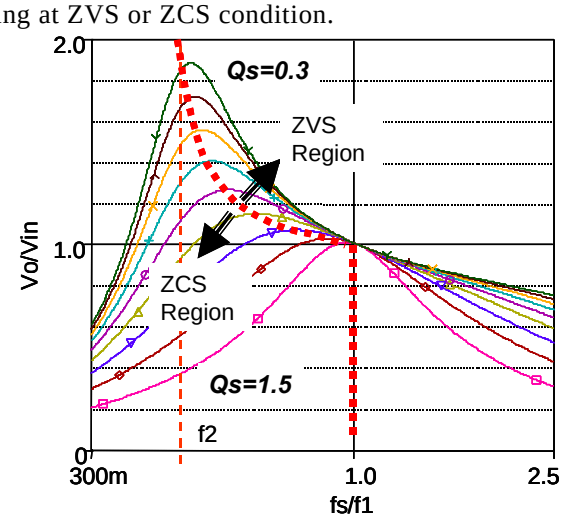

Fig. 3 DC characteristic of LLC Resonant Converter

For this application, MOSFET is used as primary switches, so ZVS is preferred. To ensure ZVS operation, the operating range of this converter is above resonant frequency f2. Lr and Cr are chosen to ensure at heavy load, the converter still run at ZVS condition. The choice of Lm will determine the switching frequency range and MOSFET turn off current. With smaller Lm, the switching

frequency range will be smaller, but MOSFET turn off current will be higher which will increase switching loss.

Fig. 4 shows the simulation waveform of LLC resonant converter working at switching frequency above f2 and below f1. The waveforms are resonant tank input voltage Va, series resonant inductor Lr current I_Lr; magnetizing inductor Lm current I_Lm, output current Io and transformer primary voltage Vt. The operation of half of switching cycle can be divided into three modes.

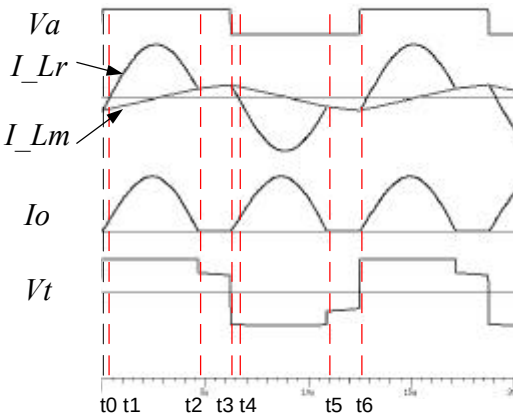

Fig. 4 Simulation waveform of LLC Resonant Converter

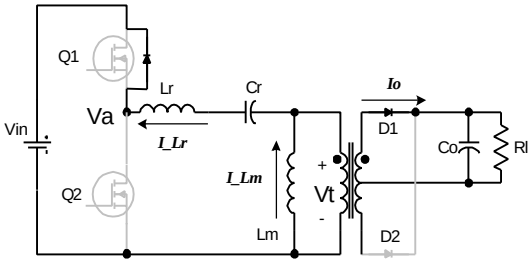

Mode 1

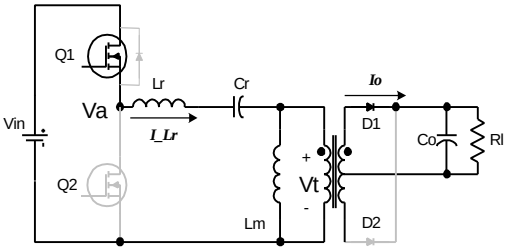

Mode 2

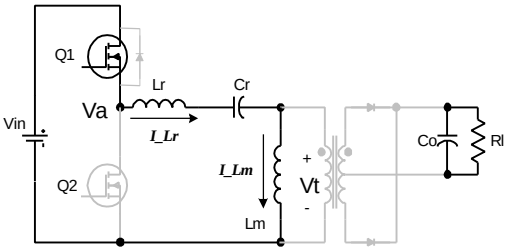

Mode 3

Fig. 5 Operating modes of LLC resonant converter

Mode 1 (t0 to t1)

This mode begins when Q2 is turned off at **t0**. At this moment, resonant inductor Lr current is negative; it will flow through body diode of Q1, which creates a ZVS condition for Q1. Gate signal of Q1 should be applied during this mode.

When resonant inductor Lr current flow through body diode of Q1, I_Lr begins to rise, this will force secondary diode D1 conduct and Io begin to increase. Also, from this moment, transformer sees output voltage on the secondary side. Lm is charged with constant voltage.

Mode 2 (t1 to t2)

This mode begins when resonant inductor current I_Lr becomes positive. Since Q1 is turned on during mode 1, current will flow through MOSFET Q1.

During this mode, output rectifier diode D1 conduct. The transformer voltage is clamped at Vo. Lm is linearly charged with output voltage, so it doesn't participate resonant during this period. In this mode, the circuit works like a SRC with resonant inductor Lr and resonant capacitor Cr.

This mode ends when Lr current is the same as Lm current. Output current reach zero.

Mode 3 (t2 to t3)

At t2, the two inductor current I_Lr and I_Lm are equal. Output current reach zero. Both output rectifier diodes D1 and D2 is reverse biased. Transformer secondary voltage is lower than output voltage. Output is separated from transformer.

During this period, since output is separated from primary, Lm is freed to participate resonant. It will form a resonant tank of Lm in series with Lr resonant with Cr.

This mode ends when Q1 is turned off. As can be seen from the waveform, Q1 turn off current at t3 is small compare with peak current.

For next half cycle, the operation is same as analyzed above.

From the simulation waveform we can see, the MOSFETs are turned on with ZVS. Since the turn off current is decided by magnetizing inductance Lm, which is not related to load condition, ZVS can be achieved with any load condition. For turn off of MOSFET, turn off current is much smaller than load current, so turn off loss can be reduce. Also, the secondary side diode current reduce to zero and stay off, the reverse recovery is eliminated also. With all these, the switching loss of this converter is very small.

Next part of the paper, comparison between LLC resonant converter and PWM converter is made to show the benefit of LLC resonant converter.

III. Efficiency Comparison

In this part, the efficiency of LLC resonant converter is compared with Asymmetrical Half Bridge. Asymmetrical

Half Bridge is choosing as candidate because this topology is simple and high efficiency. Comparison is based on simulation. Simulation models of both converters were built with same design specs. Fig. 5 shows the two topologies been compared. The design specs for both converters are:

Vin=300 to 400V, Vout=48V and Pout=1kW, switching frequency for PWM 200kHz and switching frequency for LLC is from 150kHz to 200kHz.

The devices we used for two converters are:

Primary switches: IXFN26N50 500V 21A MOSFET

Asymmetrical Half Bridge secondary rectifier: STTH3003, 300V ultra fast diode, forward voltage drop 1.1V.

LLC resonant converter secondary rectifier: IXYSS20-015A, 150V shottoky diode with forward voltage drop 0.65V.

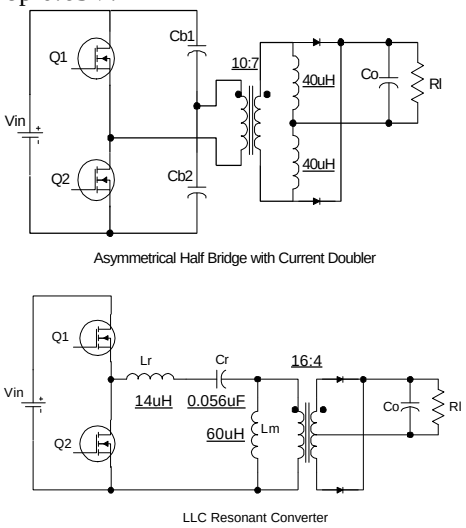

Fig. 6 Circuit diagrams for Efficiency Comparison

Fig. 6 shows the simulated input current waveform for two converters at different input voltage at full load. It can be seen that for Asymmetrical Half Bridge converter, the current waveform is highly asymmetrical at high input voltage. This will increase both the conduction loss and switching loss when the converter works in this condition. So the efficiency of the converter will be hurt by wide input range. This asymmetrical duty cycle will also increase the voltage stress of the secondary rectifier. Higher voltage rating devices have to be used which have higher forward voltage drop. Secondary conducting loss will be a large part of total loss.

For LLC resonant converter, at high input voltage, the input current have lower peak value and RMS value, so the conduction loss is much lower at high input voltage. Also, the secondary side voltage stress is fixed at two times output voltage for LLC resonant converter. Low voltage schottky diodes can be used to reduce the secondary conduction loss.

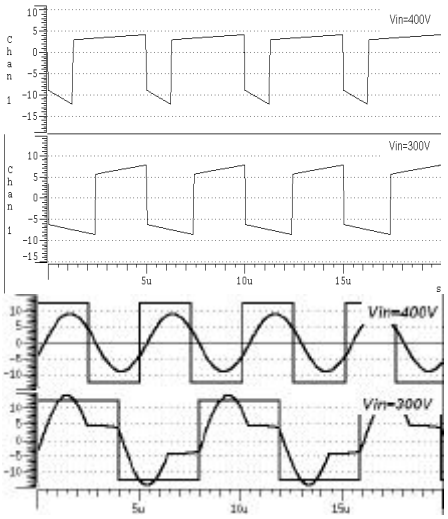

Fig. 7 Simulated input current waveform of Asymmetrical Half Bridge and LLC resonant converter at different input voltage

For resonant converter, high current stress or voltage stress is always a concern since the increase of conduction loss will compensate the benefit get from reduced switching loss.

Fig. 8 shows the primary conduction loss comparison. Because for PWM converter, at high input voltage, the duty cycle is small, so the RMS current is even higher than LLC resonant converter. When the input voltage decrease, the duty will become more symmetrical and the resonant converter will show higher RMS current and higher conduction loss. But this is not a problem for this case since our normal working condition input voltage will be within 360V to 400V. Only during fault condition would the circuit work at so low input voltage. So even with LLC resonant converter, the increasing of conduction loss is not a problem.

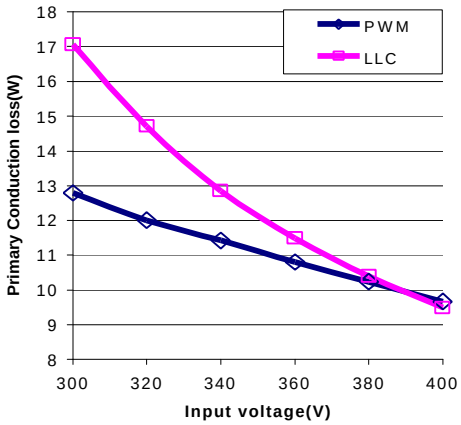

Fig. 8 Primary conduction loss comarison

Fig. 9 shows the primary switching loss comparison of Asymmetrical Half Bridge and LLC resonant converter based on the datasheet. It can be seen that switching loss

of LLC is 40% lower than PWM converter. With higher switching frequency, the difference will be significant in the total loss.

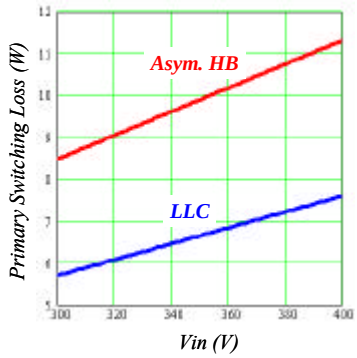

Fig. 9 Primary side switching loss comparison

Another benefit of LLC resonant converter is that the voltage stress on the secondary rectifier is much lower than asymmetrical half bridge. For Asymmetrical half bridge converter, the highest voltage stress on secondary diode will be higher than 250V; 300V diode has to be used. For LLC converter, the voltage stress is limited to two times output voltage, so 150V shottkey diode can be used. In this comparison, STTH3003, which has forward voltage drop of 1.1V, is used for PWM converter. For LLC converter, we choose IXYSS20-015A, which has forward voltage drop of 0.65V. This will reduce the secondary conduction loss from 22W to 13W. This means 1% efficiency improvement.

There is still something not included into this analysis: the rectifier diodes reverse recovery loss. In PWM converter, the diode turns off at load current with high dv/dt; this will cause pretty high reverse recovery loss. In LLC resonant converter, since the diode current resonant to zero, this part of loss will be much smaller also.

Table 1 shows the loss breakdown for asymmetrical half bridge and LLC resonant converter. Without considering secondary reverse recovery loss, LLC resonant converter can provide about 1.5% efficiency improvement over asymmetrical half bridge.

Table 1 Loss breakdown of PWM Converter & LLC resonant converter

	PWM	LLC
Primary conduction loss	9.67	9.49
Primary switching loss	11.3	7.5
Secondary conduction loss	22.0	13.0
Secondary switching loss	?	0
Total	42.97+?	29.99

IV. TEST RESULT

In this part, the test results of asymmetrical half bridge and LLC resonant converter are presented. Fig. 10 shows the efficiency comparison of LLC resonant converter and asymmetrical half bridge for different load condition with 400V input voltage.

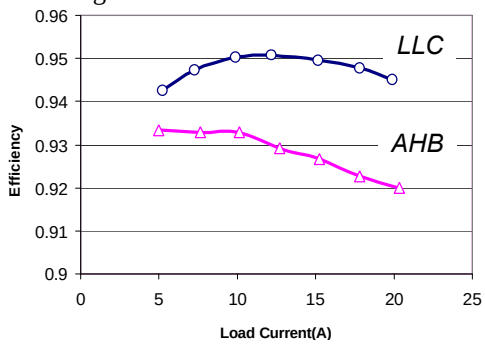

Fig. 10 Efficiency comparison with load change

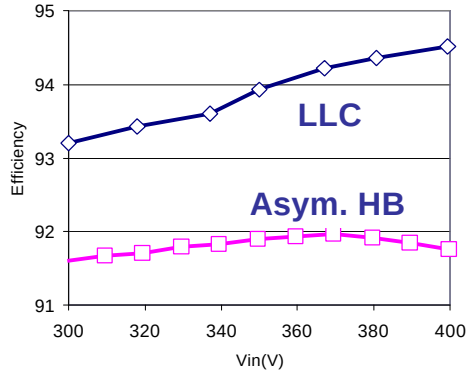

Fig. 11 Efficiency comparison with line change

Fig.11 shows the efficiency comparison of these two converters at different input voltage with full load.

V. CONCLUSION

In this paper, a novel LLC three elements resonant converter is proposed. Operation modes of the converter are discussed. DC characteristic of the converter is generated with simulation tool. This converter can achieve high efficiency at high input voltage. Besides of very low switching loss, the conduction loss of this converter is lower than PWM converter because of the elimination of secondary filter inductor. The efficiency comparison of this converter with asymmetrical half bridge shows that this converter can get 2 to 3% improvement on the efficiency.

REFERENCES

[1] G. Huang, "LLC Series Resonant DC/DC Converter," 2000 DPEC Seminar Proceeding.

[2] R. Steigerwald, “A comparison of half bridge resonant converter topologies,” IEEE IAS Conf. Rec., City, Oct. 1987, pp. 135-144.

[3] V. Vorperian and S. Cuk, “A complete dc analysis of the series resonant converter,” IEEE PESC Conf. Rec., June 1982, pp. 85-100.